IES-2050-M12

Industrial 5-port lite-managed Ethernet switch with 5x10/100Base-T(X), M12 connector, IP-67 grade

Features

- Fastest Redundant Ethernet Ring : **O-Ring** (recovery time < 10ms over 250 units of connection)
- **Open-Ring** support the other vendor's ring technology in open architecture
- Waterproof M12 connector (A-coding)
- Multiple Redundant Ethernet technology RSTP/STP, O-Ring supported to protect your industrial network
- SNMP v1/v2c/v3 support for secured network management
- Configurable by Web-based and Windows utility **(Open-Vision)**
- Supports 5 ports 10/100Base-T(X)
- Environmentally sealed by IP-67 grade protection and ultrarugged enclosure for toughest industrial usages
- Event notification through Syslog, Email, and SNMP trap
- DIN-Rail and wall mounting enabled
- Support LLDP Protocol

Introduction

IES-2050-M12 is a waterproof lite-managed redundant ring Ethernet switch with 5x10/100Base-T(X) ports which is full compliant with IP-67 standard. With complete support of Ethernet redundancy protocol, O-Ring (recovery time < 10ms over 250 units of connection) and RSTP/STP (IEEE 802.1w/D) can protect your mission-critical applications from network interruptions or temporary malfunctions with its fast recovery technologies. It is specifically designed for the toughest industrial environments. In combination with its IP-67 design and the superb management functionalities. IES-2050-M12 is constructed of a rugged aluminum case and designed with IP-67 rated RJ45 Ethernet ports (M12 type connector), which provide a waterproof, and dust-tight connection. IES-2050-M12 can be managed centralized by a powerful windows utility — Open-Vision. In addition, the wide operating temperature, range from -40 to 70°C, can satisfy most of operating environment. The IES-2050-M12 can be easily adopted in almost all kinds of applications and provides the most rugged solutions for managing your network in outdoor. Therefore, IES-2050-M12 is one of the most reliable choices for industrial networking applications.

Open-Vision

ORing's switches are intelligent switches. Being different from other traditional redundant switches, ORing provides a set of Windows utility (**Open-Vision**) for users to manage and monitor all of industrial Ethernet switches on the industrial network.

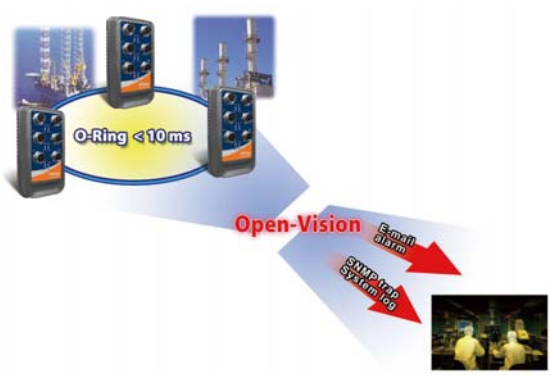

Network connection

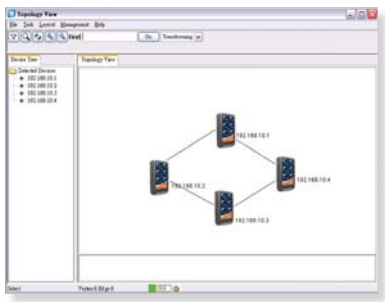

Topology View

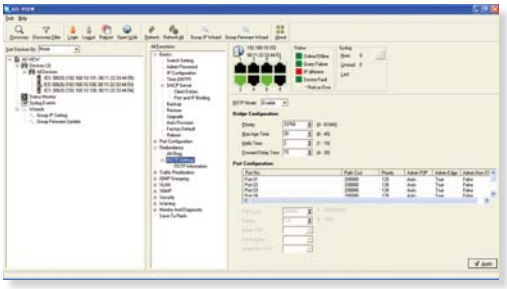

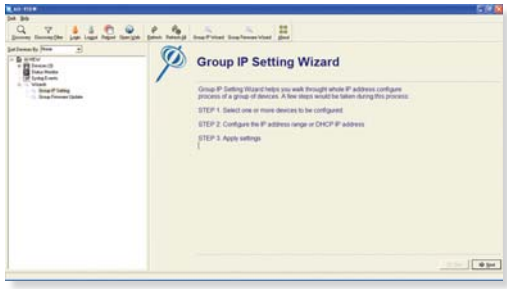

Monitoring and Configuration interface

Dimensions

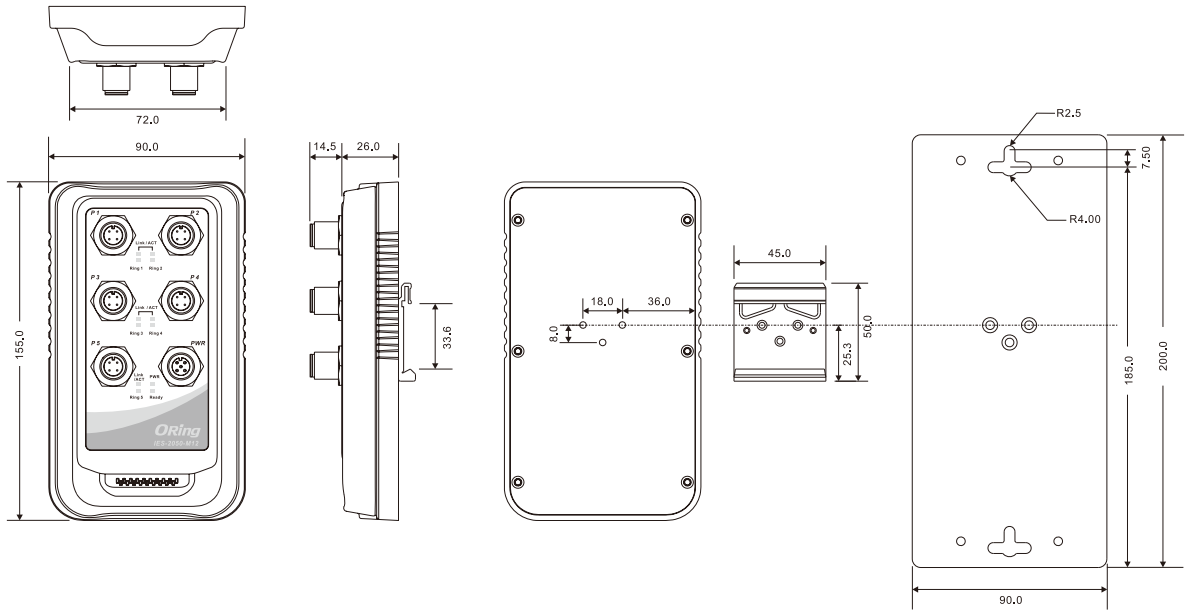

(Unit=mm)

Specifications

ORing Switch Model	IES-2050-M12
Physical Ports	
10/100 Base-T(X) Ports in RJ45 Auto MDI/MDIX	5
Connector Type	M12 Waterproof (A-coding)
Technology	
Ethernet Standards	IEEE 802.3 for 10Base-T IEEE 802.3u for 100Base-TX IEEE 802.3x for Flow control IEEE 802.1D for STP (Spanning Tree Protocol) IEEE 802.1w for RSTP (Rapid Spanning Tree Protocol) IEEE 802.1AB for LLDP (Link Layer Discovery Protocol)
MAC Table	2048 MAC addresses
Priority Queues	4
Processing	Store-and-Forward
Switch Properties	Switching Dandwidth : 1.0Gbps VLAN: Port Based
Security Features	Enable/Disable ports VLAN to segregate and secure network traffic SNMPv3 encrypted authentication and access security
Software Features	STP/RSTP (IEEE 802.1D/w) Redundant Ring (O-Ring) with recovery time less than 10ms over 250 units Port configuration, status, statistics, monitoring, security

Network Redundancy	O-Ring Open-Ring Fast recovery STP RSTP
LED Indicators	
Power Indicator	Green : Power LED x 1
Ready / Ring Master Indicator	Amber LED : Light on for system ready Blinking for system ready and Ring master mode Light off for system failed
O-Ring Indicator	Amber : Indicate port operated in O-Ring mode (per port)
10/100Base-T(X) RJ45 Port Indicator	Green for port Link/Act. (per port)
Power	
Input Power	12~48 VDC power input
Connector Type	M12 Waterproof (A-coding)
Power Consumption (Typ.)	3 Watts
Overload Current Protection	Present
Reverse Polarity Protection	Present
Physical Characteristics	
Enclosure	IP-67
Dimensions (W x D x H)	90(W) x 40.5(D) x 155(H) mm (3.54x1.59x6.1 inch.)
Weight (g)	470 g
Environmental	
Storage Temperature	-40 to 85°C (-40 to 185°F)
Operating Temperature	-40 to 70°C (-40 to 158°F)
Operating Humidity	5% to 95% Non-condensing
Regulatory Approvals	
EMI	FCC Part 15, CISPR (EN55022) class A
EMS	EN61000-4-2 (ESD), EN61000-4-3 (RS), EN61000-4-4 (EFT), EN61000-4-5 (Surge), EN61000-4-6 (CS), EN61000-4-8, EN61000-4-11
Shock	IEC60068-2-27
Free Fall	IEC60068-2-32
Vibration	IEC60068-2-6
Safety	EN60950-1
MTBF (Hours) (MIL-HDBK-217F2, GB, GC, 25°C)	662,177
Warranty	5 years

Ordering Information

IES-2 AA B-M12

Code Definition	10/100Base-T(X) Port Number	Additional Port Number
Option	**- 05:** 5 ports	**- 0:** 0 ports

Available Model	Model Name	Description
	IES-2050-M12	Industrial 5-port lite-managed Ethernet switch with 5x10/100Base-T(X), M12 connector, IP-67 grade

Packing List

- IES-2050-M12
- DIN-Rail Kit
- Wall-mount Kit
- ORing Tool CD
- Quick Installation Guide

Optional Accessories (Can be purchased separately)

- Open-Vision M500, Powerful network management windows Utility Suite, 500 IP devices
- DR-45 series, 45W DIN-Rail power supply
- DR-75 series, 75W DIN-Rail power supply
- DR-120 series, 120W DIN-Rail power supply
- M12C series, Cables with M12 connectors